REV	DESCRIPTION	DRW.	DATE
00	初版发行	M.C.N	2022.08.05

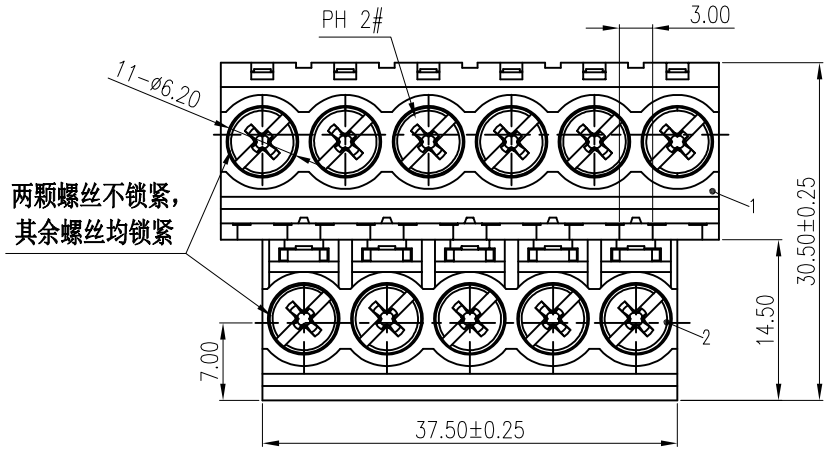

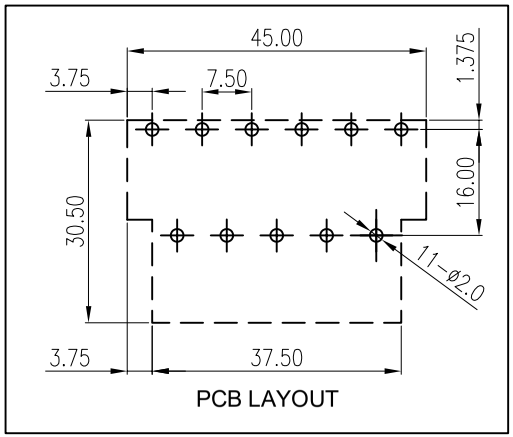

PCB LAYOUT

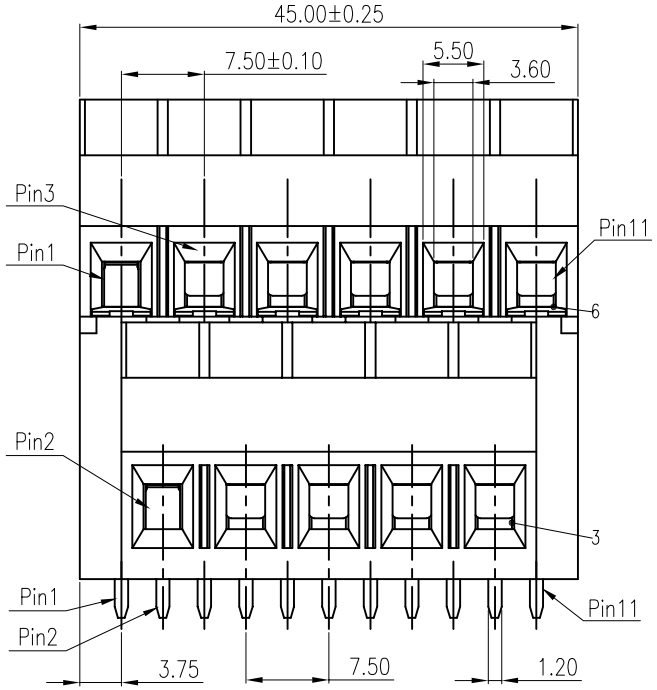

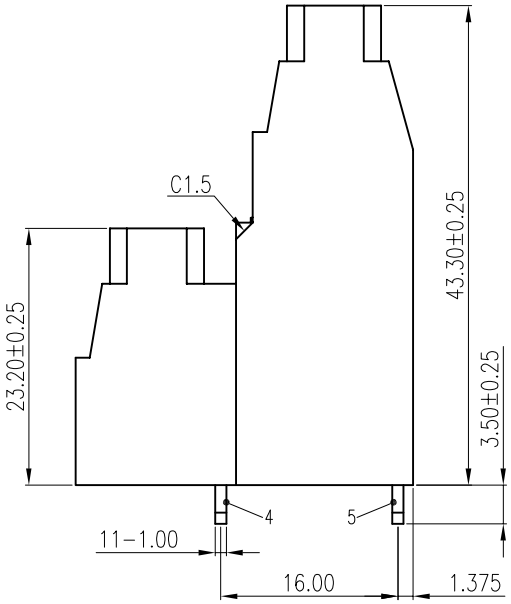

Notes/备注:

1. Electrical properties/电气特性

UL Standard/UL标准

Use Group/应用组别	B	C	F
Rated Voltage/额定电压 (V)	300	600	630
Rated Current/额定电流 (A)	30	10	30
Withstanding voltage/工频耐电压	AC 2500V/1Min		

IEC Standard/IEC标准

Rated Voltage/额定电压(V): 800

Rated Current/额定电流(A): 30

Overvoltage Category/过电压类别 /Pollution Degree/污染等级	II/2	III/2	III/3
Voltage/电压 (V)	1000	800	630
Rated Impulse Voltage/冲击耐电压(KV)	2.5	2.5	2.5

2. Connection data/连接数据

Wire range/线径范围(AWG/mm²): 24~10/0.34~4

Stripping length/剥线长度(mm): 8~10

Wire tightening torque/导线扭矩(N.m): 1.0

3. Environmental safety/环境安全

Operating temperature/工作温度范围(℃): -40~+105

RoHS compliant/符合RoHS环保要求

ITEM	NAME OF PART	MATERIAL	NOTES
6	PLUG PLATE 塞片	PA66	UL94 V-0
5	SOLDER PIN 端子	Copper Alloy	Sn Plated
4	SOLDER PIN 端子	Copper Alloy	Sn Plated
3	CAGE 方块	Copper Alloy	Ni Plated
2	SCREW 螺丝	Steel	M3.5/Zn Plated
1	HOUSING 主体	PA66	Black/UL94 V-0

Part No./料号说明:

AF103-01-11P-X

Color/颜色

1:Brown/棕色 6:Blue/蓝色
2:Red/红色 7:Purple/紫色
3:Orange/橙色 8:Grey/灰色
4:Yellow/黄色 9:White/白色
5:Green/绿色 A:Black/黑色

Nominal dimension Tolerances (mm)							
0 to 18	over 18 to 30	over 30 to 50	over 50 to 80	over 80 to 120	over 120 to 180	over 180 to 250	over 250 to 320
±0.25	±0.3	±0.35	±0.5	±0.7	±0.9	±1.0	±1.2

APP.	DATE:	PART NO.: AF103-01-11P-X	
CHK.	DATE:		
DRW. M.C.N	DATE: 2022.08.05	DARWING TYPE: Customer Drawing	
PROJECTION		UNITS: mm	SCALE: 2:1 / SHEET/OF: 1/1

AINEWELL 昆山艾尼维尔电子有限公司
KUN SHAN AINEWELL ELECTRONICS CO.,LTD

A3